Model-Based Active Equalization of Closed-Box Subwoofers

Introduction

In this article a technique is discussed using active electronics to bring closed-box subwoofer response into exact alignment with a specific response model. Typical models include the Butterworth, Quasi-Butterworth and Linkwitz-Riley response functions. Closed-box subwoofers have several advantages over vented systems. These include lower group delay, better transient response, slower low-frequency roll-off allowing for better room coupling, and generally smaller enclosure volumes. On the downside, without the resonant boost of a vented enclosure, all acoustic output must be produced by the woofer cone displacement. If one is to meet the high SPL requirements of modern home theater systems, closed-box subwoofer drivers must have a very large symmetric X_{max}.

Methods for electronic closed-box equalization have been treated before. Siegfried Linkwitz described a clever single op-amp biquad-based equalizer some time ago (Ref 1). There is an excellent discussion on his website of the effect this equalization has on phase response, group delay and transient response. His design covers most, but not all, possibilities. The circuit topology is not intuitively obvious and component values are difficult to calculate. In fact, calculations are sufficiently difficult that a spread sheet is now available to help determine component values. The approach presented here uses a state variable filter (SVF). SVF circuit parameters relate directly to desired equalizer response, passive component count is low and the values are easily calculated.

Before continuing it is important to note the difference between equalization and in-room response correction. As stated above, equalization involves bringing a loudspeaker's output into alignment with a specified response function. For closed-box subwoofers the equalization typically employs a large amount of low-frequency boost, often more than 10dB, so that the resulting response can meet the low-frequency demands of modern home theater sound tracks.

In contrast with equalization, today most audio/video processors and receivers have some form of room correction. Room correction algorithms try to correct loudspeaker and subwoofer response irregularities caused by room boundary effects and standing waves. They also perform time alignment of the complete system with respect to a preferred listening position. Correction levels rarely exceed $\pm$6dB.

Closed-Box Frequency Response

Closed-box subwoofer equalization is not that complicated, but a good model for closed-box frequency response and some math are needed to execute a design. Where possible the math is illustrated with graphs or plots to help explain the concepts. A specific example will also clarify the approach presented here.

The response of a closed-box loudspeaker can be modeled as a second-order high-pass filter. This model has the form:

$$H_{cb}(s) = \frac{s^2 T_{cb}{}^2}{s^2 T_{cb}{}^2 + s\left(\frac{T_{cb}}{Q_{cb}}\right) + 1} \qquad (1)$$

Where: $H_{cb}(s)$ = closed-box complex frequency response

$s = \sigma + jw = \sigma + j2\pi f$ (s is a complex variable)

$j = \sqrt{-1}$

$$T_{cb} = \frac{1}{2\pi f_{cb}}$$

f_{cb} = closed-box resonant frequency in Hz

and:

Q_{cb}= closed-box Q

Note that $H_{cb}(s)$ is complex and therefore has both magnitude and phase. To evaluate this response function for known values of f_{cb} and Q_{cb} substitute $j2\pi f$ for s, and vary f over the frequency range of interest. Below f_{cb} response will roll down at 12db/oct.

Subwoofer Target Response

Before we can equalize a subwoofer we must first specify a target response or model. Typical home theater rooms have a total volume on the order of 2500ft^3 to 3000ft^3. For this volume, THX suggests using a fourth-order Linkwitz-Riley (LR4) high-pass filter model set at a frequency of 20Hz.

If closed-box subwoofers are 2nd-order hi-pass why a 4th -order hi-pass response? Typically, large subwoofer drivers have a free-air resonance, f_{sa} , on the order of 20-25Hz. When placed in a small sealed enclosure however, f_{cb} will rise to 45-50Hz. At frequencies below f_{cb} cone displacement will rise rapidly due to the equalization required to get subwoofer response down to 20Hz. So as part of the equalizer a 2nd -order hi-pass filter is added to prevent woofer damage from high level low-frequency signals below 20Hz. The LR4 response may also better compliment the room gain effect.

Equalizer Design Process

The high-pass LR4 response function has an interesting property. It is the product of two 2nd-order Butterworth (B2) responses. We can write a pseudo equation for the LR4 response like this:

$$\text{B2 X B2} \rightarrow \text{LR4} \qquad (2)$$

That is, two 20Hz B2 high-pass responses in cascade produce the 20Hz high-pass LR4 response. The LR4 response is down 6dB at the filter design frequency.

So the equalizer design process has two steps: (1) Electronically equalize the subwoofer response to B2 at 20Hz; (2) Use the first equalizer to drive a second 20Hz B2 high-pass electronic filter to complete the full equalization. Fig 1 illustrates this process.

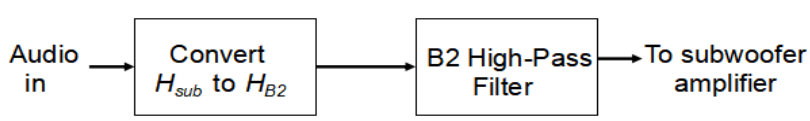

Fig 1 Subwoofer Equalizer Design Approach

An electronic equalizer is used in the first step to boost subwoofer amplifier output by several dB at frequencies below the unequalized subwoofer response. As we will see shortly, the subwoofer equalizer low-frequency gain is quite high at low frequencies, so in practice, it may be desirable to place the B2 hi-pass filter before the equalizer to reduce the possibility of low-frequency overload in the equalizer circuit.

According to Fig 1 the first step in the design process is to find an equalizer response that will cancel the subwoofer response and replace it with a B2 response at 20Hz. The B2 response has the same form as the general closed-box response only the "*cb*" subscripts are replaced with "*B2*" subscripts.

$$H_{B2}\left(s\right)=\frac{s^2T_{B2}{}^2}{s^2T_{B2}{}^2+s\left(\frac{T_{B2}}{Q_{B2}}\right)+1} \tag{3}$$

The equalizer must cancel the subwoofer response and replace it with the B2 response. The general form of the equalizer for any closed-box B2 response is:

$$H_{B2}=H_{eq}\times H_{cb} \tag{4}$$

Where

$$H_{eq}=G\frac{s^2T_{cb}{}^2+s\left(\frac{T_{cb}}{Q_{cb}}\right)+1}{s^2T_{B2}{}^2+s\left(\frac{T_{B2}}{Q_{B2}}\right)+1} \tag{5}$$

Multiplying equation (3) by H_{eq} we get

$$H_{B2}=G\frac{s^2T_{cb}{}^2+s\left(\frac{T_{cb}}{Q_{cb}}\right)+1}{s^2T_{B2}{}^2+s\left(\frac{T_{B2}}{Q_{B2}}\right)+1}X\frac{s^2T_{cb}{}^2}{s^2T_{cb}{}^2+s\left(\frac{T_{cb}}{Q_{cb}}\right)+1} \tag{6}$$

In multiplying the two responses together, notice the numerator of H_{eq} cancels the denominator of H_{cb}. giving the desired response. The term, G, in Eq. 6 is a gain term needed to adjust the equalizer response to 0dB at frequencies well above the subwoofer pass band. Eq.7 gives the value for G.

$$G=\left(\frac{T_{B2}^2}{T_{cb}^2}\right)=\frac{f_{cb}^2}{f_{B2}^2} \tag{7}$$

So how do we get the equalizer response shown in Eq. (5)? Enter the state variable filter.

The State Variable Filter

Most readers are familiar with low-pass, high-pass and band-pass filters. The state variable filter (SVF) combines all these functions in a single circuit. Fig 2 shows the “Gain of Q” form of this filter. The state variable filter consists of three operational amplifiers and some passive components. Amplifiers A2 and A3 are configured as integrators. Amplifier A1 performs a summing operation and also accepts the input. As indicated in the drawing, high-pass, band-pass and low-pass outputs exist at the outputs of amplifiers A1, A2 and A3 respectively.

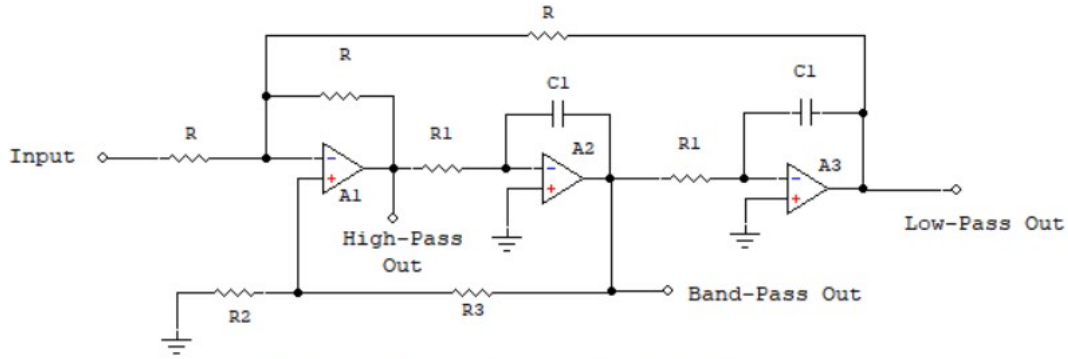

Fig 2 State Variable Filter: "Gain of Q" Form

The SVF design very simple. For a selected center frequency, f_c, and a filter Q, Q_c pick a value for C_1. Then the equations for the remaining values are:

$$R_1 = \frac{1}{2\pi f_c C_1} \tag{5}$$

Next select a value for R_2, then

$$R_3 = R_2\left(3Q_c - 1\right) \tag{6}$$

The great advantage of the SVF is that the design equations are very simple and only one capacitor and three resistor values are needed to complete the design. The resistor, R, can be any convenient value depending on the type of Op-Amp used.

The figure below is a plot of the three SVF responses for a center frequency of 100Hz and a Q of 0.7071. This is the set of B2 responses for 100Hz. Notice that all responses are equal to Q at the 100Hz center frequency, i.e. 0.7071 or -3 dB. The high-pass and low- pass responses reach unity (0 dB) at the frequency extremes, but the band pass response never rises above 0.7071. Thus the "gain of Q" name.

Now given the required equalizer response of Eq. 5, how do we use the state-variable filter to generate that response? To do this lets first write out each of the SVF's outputs with the filter set for a B2 response:

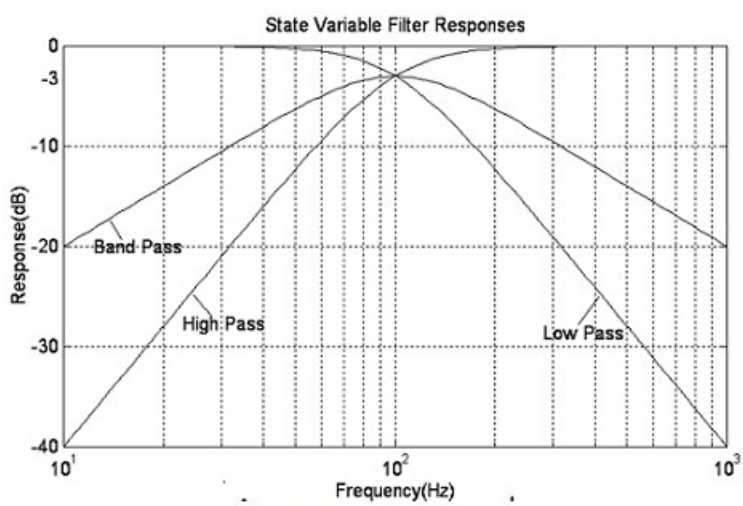

Fig 3 Responses of 100Hz State Variable Filter

Low-Pass:

$$H_{lp}(s) = \frac{-1}{s^2 T_{B2}{}^2 + s\left(\frac{T_{B2}}{Q_{B2}}\right) + 1} \tag{7}$$

Band-Pass:

$$H_{bp}(s) = \frac{sT_{B2}}{s^2 T_{B2}{}^2 + s\left(\frac{T_{B2}}{Q_{B2}}\right) + 1} \tag{8}$$

High-Pass:

$$H_{hp}(s) = \frac{-s^2 T_{B2}{}^2}{s^2 T_{B2}{}^2 + s\left(\frac{T_{B2}}{Q_{B2}}\right) + 1} \tag{9}$$

All three SVF outputs have the same denominator, the B2 denominator. Now, if we multiply the band-pass output by $\frac{T_{cb}}{T_{B2}Q_{cb}}$ we get

$$H_{bp}(s)\, x \frac{T_{cb}}{T_{B2}Q_{cb}} = \frac{s\frac{T_{cb}}{Q_{cb}}}{s^2 T_{B2}{}^2 + s\left(\frac{T_{B2}}{Q_{B2}}\right) + 1} \tag{10}$$

and then multiply the high-pass output by $\frac{T_{cb}^2}{T_{B2}^2}$ to obtain

$$H_{hp}(s)\, x \frac{T_{cb}^2}{T_{B2}^2} = \frac{-s^2 T_{cb}^2}{s^2 T_{B2}{}^2 + s\left(\frac{T_{B2}}{Q_{B2}}\right) + 1} \tag{11}$$

and finally adding equations (7), (10) and (11) together we get H_{eq}. Fig 4 illustrates the process.

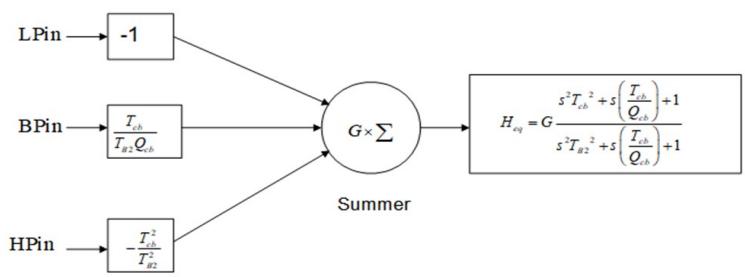

Fig 4 Summing State Variable Filter Outputs

Notice that the low-pass and hi-pass outputs (Eqs. 7 and 9) are inverted, so they must be inverted again to get the correct summing. As you will see later in this article, the summing can be done electronically with another Op-Amp.

Design Example

Now let's illustrate the design process with an example. Photo 1 shows a 15.5" x 15.5" x 17" MDF enclosure with two 10 inch 8 ohm subwoofers mounted on opposing ends of the longer dimension. In Photo 1 the second woofer on the back side is not visible. Connected in parallel these drivers make a 4 ohm subwoofer. The enclosure has a net internal volume of 36 liters and is filled with 22 oz. of polyester fiber-fill. This subwoofer can generate 100dB SPL half-space at 20Hz. Room boundaries can add another 6 to 9dB to this level depending on room placement.

Photo 1 Example Subwoofer

To implement the design we need the subwoofer parameters, f_{cb} and Q_{cb}. There are three ways to do this: 1) Use impedance data to extract the subwoofer Thiele-Small (T/S) parameters, (2) Fit a 2nd -order high-pass filter model to a simulation using a program like LspCAD or Sound Easy and 3) Fit a 2nd -order high-pass filter model directly to the subwoofer's measured frequency response. We will examine all three approaches.

Thiele-Small Analysis: Linkwitz suggests this approach on his website. From an impedance standpoint the subwoofer looks like a single loudspeaker. Fig 5 is a plot of the measured subwoofer impedance taken with CLIO at a drive level of 4 volts.

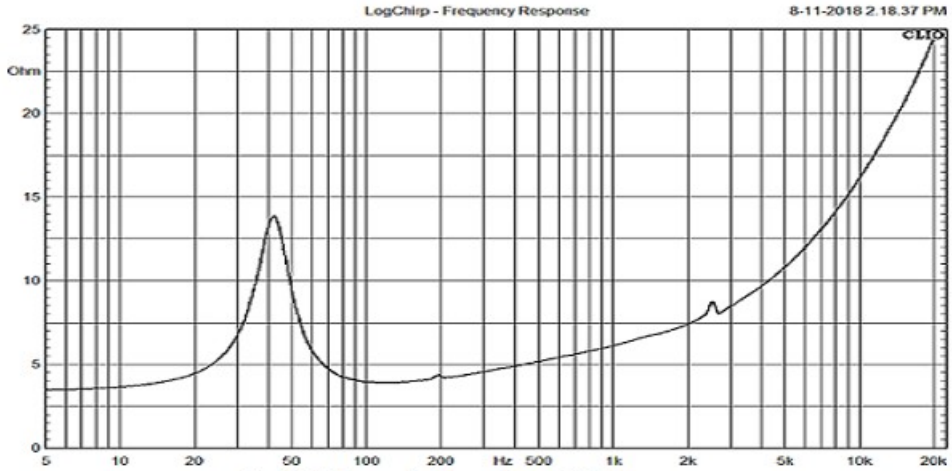

Fig 5 Subwoofer Impedance Plot

Using the T/S app in CLIO one gets values for f_{cb} and Q_{cb} of 42.7Hz and 0.83 respectively. Fig 6 shows the normalized subwoofer response predicted by LspCAD with these parameters. There is a slight broad rise between 55Hz and 150Hz, reaching a maximum of 0.34dB at 80Hz. Response is down 12.8dB at 20Hz. So only about 6.8dB boost is needed to meet the LR4 response model with the T/S data.

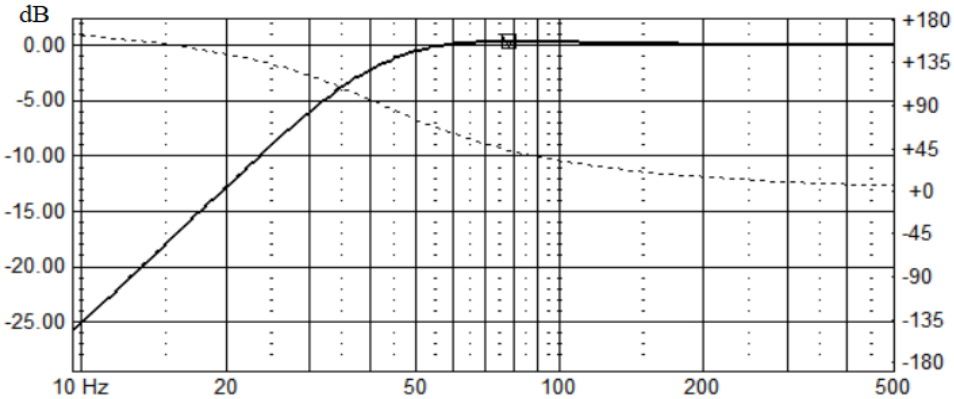

Fig 6 Subwoofer Response predicted from T/S Parameters

Simulation Based Model: The latest simulation software like LspCAD or Sound Easy is quite good. Using the *published* T/S parameters for the subwoofers a closed-box simulation was performed in LspCAD. In addition to the driver parameters, a net internal volume of 36 liters with 85% fiber-fill and a Q_a of 5 were specified for the enclosure. Voice coil inductance was also included. The LspCAD predicted response result is plotted in Fig 7.

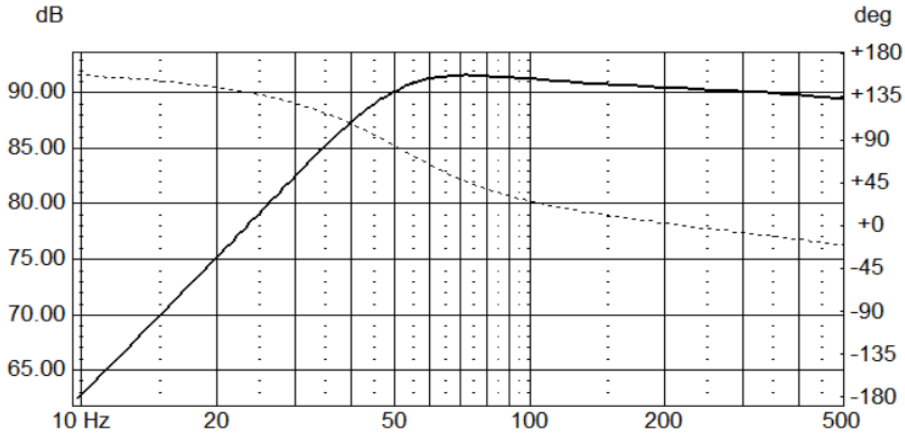

Fig 7 LspCAD Predicted Subwoofer Response

The impedance plot (not shown) indicates a resonant frequency of 47.4Hz. The response peaks 1.1dB relative to 200 Hz and is down 15dB at 20Hz. This model predicts the need for a boost of 9dB at 20Hz to get the LR4 response. A 2nd -order high-pass filter model was then fit to the predicted response in Fig. 7. The resulting optimal fit gives values for f_{cb} and Q_{cb} of 48.9Hz and 0.97 respectively. The optimal fitting process is more fully described in the next section.

Direct Measurement: Finally, the subwoofer frequency response was measured directly using the "microphone in a box" or MIB technique described in Refs(2) and (3). MIB measurement processing is available in both CLIO and CLIO Pocket. Fig 8 shows the result. Again you see a slight broad response rise between 55 and 150Hz, reaching a maximum of 0.6dB at 75Hz. Response is down 14.2dB at 20Hz relative to 200 Hz. The measured response indicates that an 8.2dB boost is needed to meet the LR4 target at 20Hz. This agrees reasonably well with the LspCAD simulation model. (Better agreement might be obtained by using actual measured T/S subwoofer driver parameters.)

As explained in Ref (2), the MIB technique begins to break down at frequencies controlled by enclosure dimensions. In Fig 8 the measurement tends to slowly degrade above 200Hz. But that's OK since home theater subwoofer response is usually down by 24 to 30dB at 200Hz.

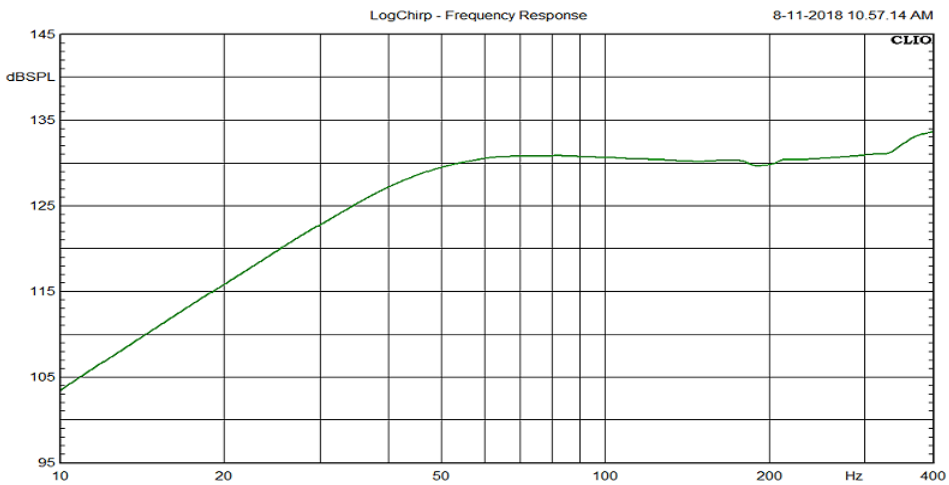

Fig 8 MIB Subwoofer Response

Now we can fit 2nd -order high-pass model to this response using the optimization feature in LspCAD with the measured subwoofer response set as the target. The values of f_{cb} and Q_{cb} are varied to get the best fit. The optimization frequency range was restricted to 10Hz to 200Hz. The T/S model parameters were used as the starting point for the optimization. This is shown in Fig 9A.

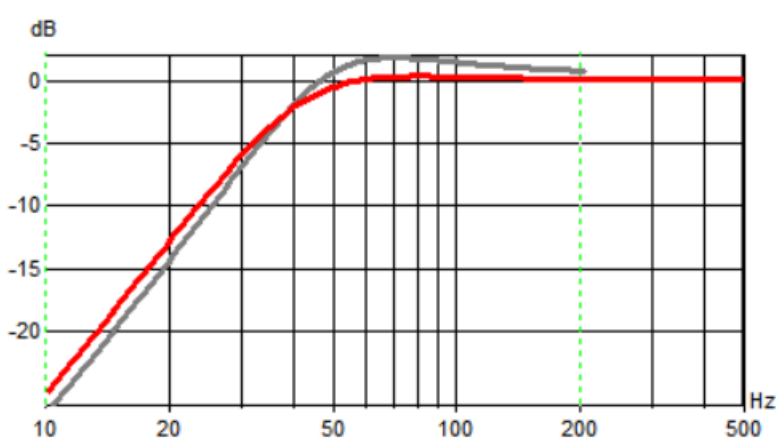

Fig 9A Optimization Starting Point

The gray curve is the measured response. The T/S model is in red. The T/S model is not a particularly good match to measured response. Fig 9B shows the post optimization result.

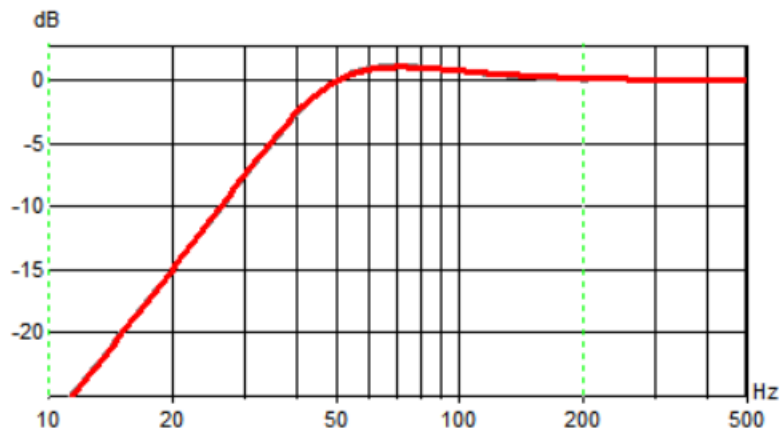

Fig 9B Optimization Result

The fit is essentially perfect with f_{cb} and Q_{cb} at 46.5Hz and 0.88 respectively. This model has the broad shallow rise between 55 and 150Hz reaching a maximum of 0.6dB at 75Hz. Response is down 14.2dB at 20Hz, requiring 8.2dB boost to get the LR4 response. These values will be used to complete the SVF design.

Before doing that, however, let's look at the ideal B2 and LR4 equalizer responses based on the parameter values 46.5Hz and 0.88. MATLAB was used to compute and plot these responses. Results are shown in Fig 10.

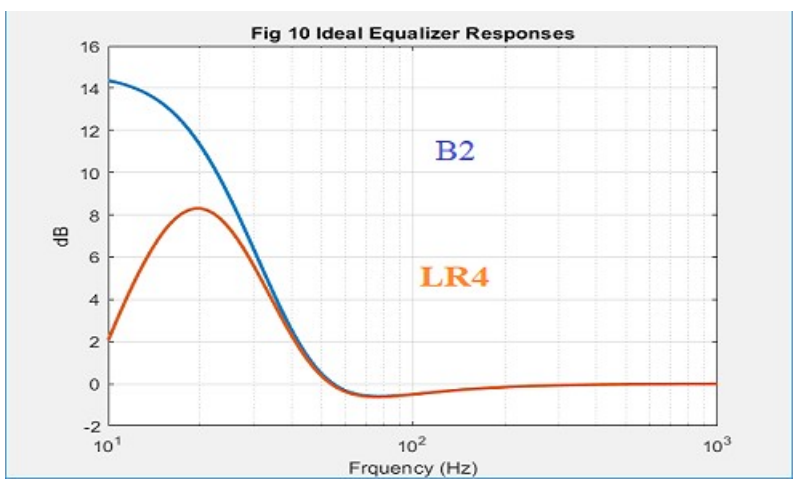

The ideal B2 equalizer response shows 11.3dB boost at 20Hz, There is also a shallow minimum of -0.6dB 75Hz. The ideal LR4 equalizer response reaches +8.3dB at 20Hz with the same minimum as the B2 response.

An Equalizer Example

A schematic of the complete circuit is shown in Fig 11. For simplicity, power supply connections are omitted.

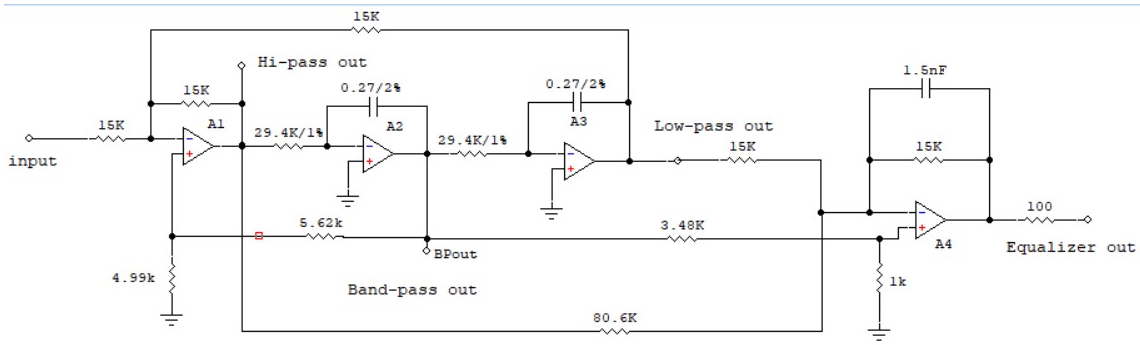

Fig 11 Example SVF Schematic

The equalizer is a bit more complicated than that shown in Fig 2. In addition to Op-Amps A1 through A3, A4 is needed to implement the weighted sum of SVF outputs. The summer response is rolled off at high frequencies with a 1.5nF cap to reduce high-frequencies entering the subwoofer amplifier. The circuit can be built with one quad Op-Amp or two dual Op-Amps. A third dual Op-Amp can be used to implement the 2nd –order B2 high-pass filter and gain stage. 1% resistors and 2% caps were used to get as close as possible to the ideal responses of Fig 10 with analog circuits.

Let's go through the SVF design process together. Referring to Fig 2, remember we want a 20Hz, B2 alignment in the equalizer. Setting the frequency at 20Hz and selecting C_1=0.27µF then:

$$R_1 = \frac{1}{2\pi \times 20 \times 0.27 \times 10^{-6}} = 29.47K\Omega$$

29.4K is the closest standard 1% value. Now for the B2 alignment:

$$Q_{B2} = \frac{\sqrt{2}}{2} = 0.7071$$

Using Eq. 6 and selecting R_2 = 4.99K ohms we get

$$R_3 = R_2\left(3Q - 1\right) = 1.121R_2 = 5.56K\Omega$$

5.62K ohms is the closest 1% value. The value for R was set to 15K

Now lets look at the summing operation. Fig 12 is an expanded view of the summer. Its function is similar to A1 in Fig 2. Notice both inverting and non-inverting inputs are used. Remember both the low-pass and high-pass signals must be inverted in the summing operation.

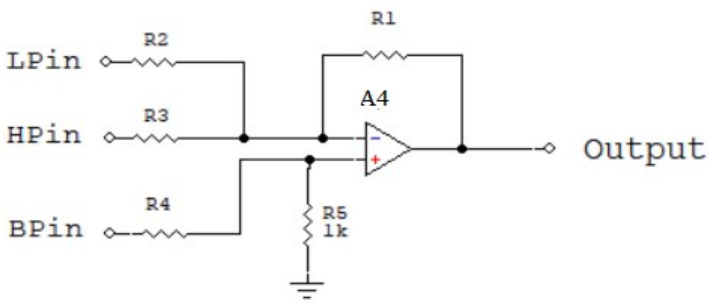

Fig 12 Op-Amp Summer

The gain from inverting inputs LPin and HPin to the output is:

$$G_n = \frac{R_1}{R_n} \qquad \text{for n= 2,3} \tag{13}$$

To solve for R_n rewrite Eq. 13 as:

$$R_n = \frac{R_1}{G_n} \qquad \text{for n=2,3} \tag{14}$$

Now to compute values for R_2 and R_3 we need the weighting factors:

$$G_{LP} = 1$$

$$G_{HP} = \frac{T_{cb}^2}{T_{B2}^2} = \frac{f_{B2}^2}{f_{cb}^2} = \frac{20^2}{46.5^2} = 0.185$$

Selecting R_1=15K ohms then R_2=15K and:

$$R_3 = \frac{15}{0.185} = 81.1K\Omega$$ The closest standard 1% value for R_3 80.6K.

Computing the value for R_4 is a bit more complicated. Because R2 and R3 are connected to the outputs the of A1 and A3 respectively, the summer inputs HPin and LPin are at virtual ground. So the A4 non-inverting gain is a function of R1 and the parallel combination of R_2 and R_3. Calling this value R_{par} we have

$$R_{par} = R_2 // R_3 = \frac{80.6 \times 15}{80.6 + 15} = 12.65K\Omega$$

Now the A4 non-inverting gain is:

$$G_{ninv} = \frac{R_1 + R_{par}}{R_{par}} = \frac{15 + 12.65}{12.65} = 2.186$$

But the band-pass weighting is

$$G_{BP} = \frac{T_{cb}}{T_{B2}Q_{cb}} = \frac{f_{B2}}{f_{cb}Q_{cb}} = \frac{20}{46.5 \times 0.88} = 0.489$$

So the R4, R5 Lpad must be picked to attenuate BPin by

0.489/2.186=0.223

With R5 set to 1K the required value for is R4=3.48K. Fortunately 3.48K is a standard 1% value,

This completes the SVF example design.

The B2 High-Pass Filter and Gain Stage

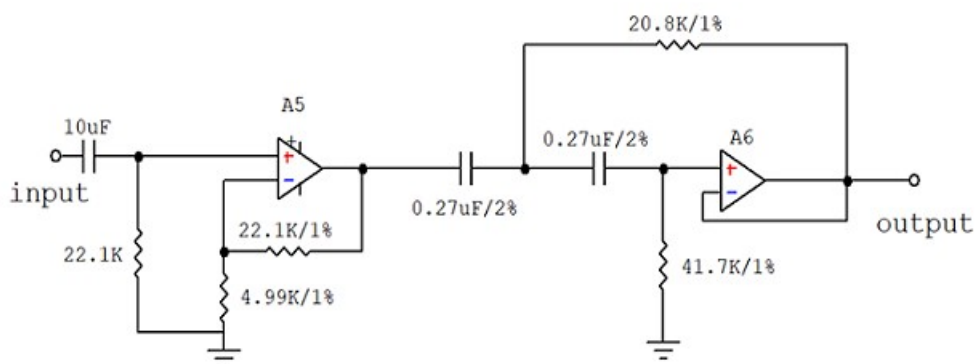

Fig 13 B2 Hi-Pass Filter and Gain Stage

Fig 13 shows the B2 high-pass filter and input buffer/amplifier. The 2nd-order high-pass filter uses a classic Sallen and Key circuit. For this circuit to work correctly, it must be driven from a very low source impedance. A5 supplies the low-impedance drive and also provides the gain needed to bring the complete equalizer to 0 dB at frequencies well above the subwoofer pass band. Choosing C=0.27uF/2%, the high-pass filter design app in LspCAD calculates the resistor values given in Fig 13. From Eq. 7 the required gain is:

$$G = \left(\frac{T_{B2}^2}{T_{cb}^2}\right) = \frac{f_{cb}^2}{f_{B2}^2} = \frac{46.5^2}{20^2} = 5.41 = 14.7dB$$

Using a feedback resistor of 22.1K/1% on A5, a 4.99K/1% resistor produces the desired gain.

Experimental Results

In order to validate the design procedure discussed above, an equalizer was built using the component values shown in Figs. 11 and 13. The equalizer was assembled with various prototyping circuit boards and placed in electronics project case (See Photo 2). Three LF412 dual Op-Amps were used to complete the equalizer. It's not too professional looking, but it works.

Photo 2 Prototype Equalizer

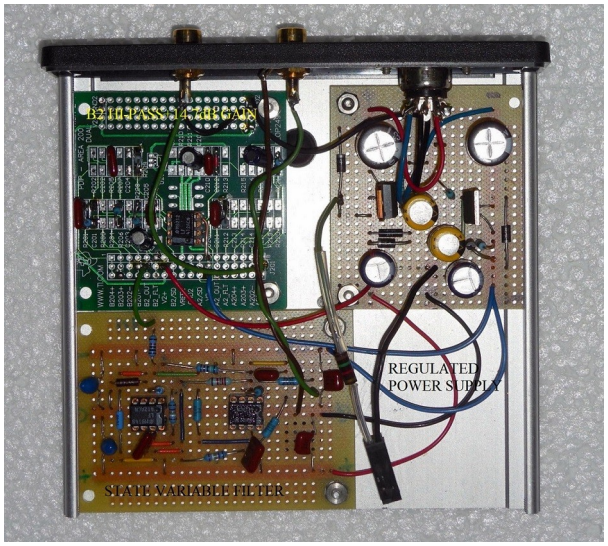

Fig 14 is a plot of the equalizer's B2 and LR4 frequency responses measured with CLIO Pocket.

Fig 14 Measured Equalizer Responses

The B2 boost at 20Hz is 11.2dB. There is also the expected broad shallow dip starting at about 50Hz and reaching a minimum of -0.62dB Hz at 75Hz. The LR4 boost at 20Hz is 8.2dB. Both results are within 0.1dB or less of the model predictions of Fig 10.

Equalized Subwoofer Responses

The equalizer was next used to drive the subwoofer amplifier. The resulting MIB measurements taken with CLIO Pocket are plotted in Fig 15.

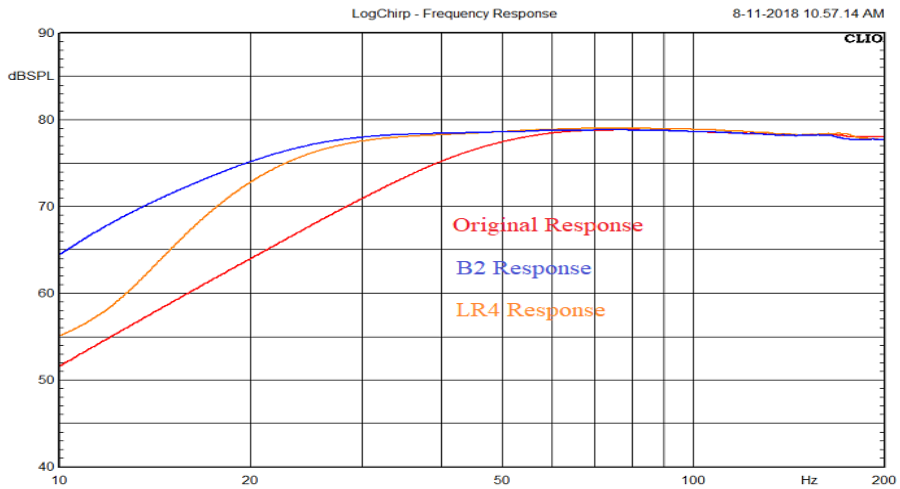

Fig 15 Measured Subwoofer Responses

The subwoofer's B2 equalized response is down 3.0dB relative to 20Hz. Perfect! The LR4 response is down 5.9dB at 20Hz. Almost perfect. The LR4 response reaches -6dB at 19.7Hz.

Final Comments

Properly implemented, the SVF design procedure presented in this article can produce an exact alignment with a specified response model. Designing the SVF is simple and straightforward. Perhaps the trickiest part of the process is determining the parameters f_{cb} and Q_{cb}. Three approaches were examined assuming that at least one approach would be available to the reader. Considering the example, the T/S approach seems the least reliable. The T/S approach is based on a free-air driver model and may not properly account for enclosure effects. It does have the advantage that no model fit is required. If you have good loudspeaker design software, the second approach may be good enough. However, a caution: use measured parameters rather than manufacturer's published values. Samples can often vary from manufacturer's specs. The third approach using direct measurement of subwoofer response is best. Be careful though, large voice coil inductance can distort the 2nd -order response.

This article concentrated on the equalization of home theater subwoofers and the LR4 response model. However, the SVF equalizer can be used on any closed-box loudspeaker. For music listening a 2nd – order equalization may be preferred with a higher frequency and lower Q. Perhaps 30Hz and Q=0.6. The lower Q may compliment room gain.

To work correctly the SVF must see a very low driving point impedance. With 2nd -order equalization only use the buffer/amplifier, A5, in Fig 13 for this purpose. Tight tolerance components were used in the prototype equalizer to validate the design equations. The C1 caps should be closely matched. This can be done with a good LCR meter. R1 can then be calculated using the measured value of C1.

Appendix:

The Origin of the State Variable Filter Name

In mathematics, higher order ordinary differential equations can be expressed in a compact vector-matrix form called the state-variable formulation:

$$\frac{d\underline{x}}{dt} = F\underline{x} + G\underline{u} \qquad 1A$$

Where $\underline{x}$ is an n-dimensional vector, $\frac{d\underline{x}}{dt}$ is the time derivative of $\underline{x}$, F is an n x n matrix describing the relationships between the various elements of $\underline{x}$ and its derivative. $\underline{u}$ is a vector of inputs to the system and the matrix, G, describes the relationship between those inputs and the state derivative.

Now consider a body moving in a straight line. Let the output of A1 represent the body's acceleration. Then the integrator, A2, produces velocity and the A3 output is position. Given an appropriate initial condition, the three outputs completely describe the "state" of the moving body. More formally, the SVF is an *analog realization* of equation 1A for a 2nd -order system. (Technically, in the mathematical sense, the A1 output is not a state, rather the summing op-amp A1 implements elements of the matrices ***F*** and ***G***.)

References

1. www.linkwitzlab.com/filters.htm#9

2. Joseph D'Appolito, "Measuring Loudspeaker Low-Frequency Response", AudioXpress, June 2012

3. Joseph D'Appolito, "Testing Loudspeakers at low Frequencies with CLIO", available at http://www.audiomatica.com/wp/?page_id=350

Measurement Equipment and Software

The following test equipment and software were used to develop the data presented in this article:

CLIO measurement system with version 11.41QC software
CLIO Pocket with version 1.5 software
B&K 4191 ½″ laboratory grade condenser microphone
B&K Type 2669 microphone preamp
Listen Sound Connect microphone power supply and amplifier
B & K Microphone calibrator
CLIO Model 4 QC Box and Power amp for speaker testing
LspCAD Pro
MATLAB R2018a

Bio

Dr. D'Appolito has been an independent consultant in audio and acoustics for 35 years. He is a long time contributor to AudioXpress and its predecessor, Speaker Builder. He heads his own consulting practice, D'Appolito Laboratories, Ltd., specializing in the design, test and evaluation of loudspeaker systems for two-channel and home theater applications. He also served as Chief Engineer for Snell Acoustics from 2003 to 2010. In that position he led and participated in the design of some 80 loudspeaker systems for 2-channel, home theater and custom installation applications. He is the author of *Testing Loudspeakers,* an acknowledged bible on the subject, which has been translated into four languages, including Italian and Chinese. Prior to his work in audio he spent five years active duty in the US Navy and then some twenty-five years doing classified research in navigation and guidance system error analysis, GPS error analysis and the development of advanced non-linear signal processing algorithms for passive sonar under government contracts.